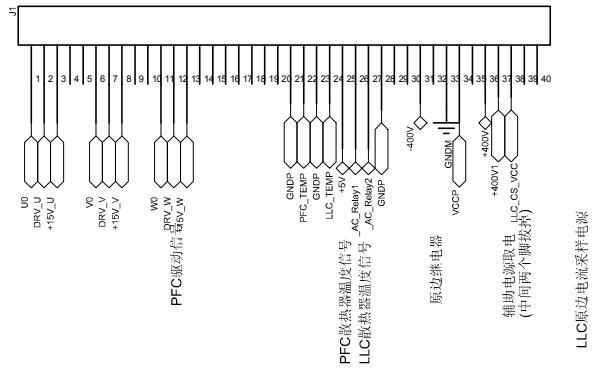

M1板

Page1：目录
Page2：AC功率电路
Page3：小辅助电源（交流电流采样+PFC驱动）
Page4：交流电流采样电路
Page5：PFC驱动电路
Page6：交流电压采样
Page7：原边DSP
Page8：原副边通讯

M1板

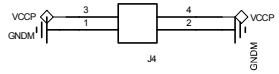

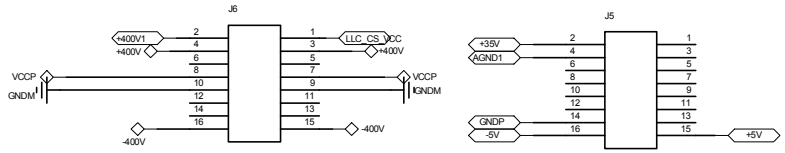

U1板

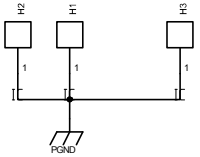

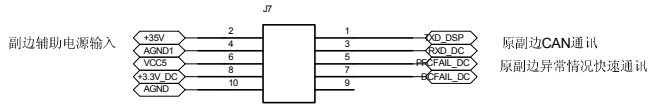

原副边通讯小板

0	NEW	xxx	2014-7-4
REV	ECO NO.	CHANGE DESCRIPTION	Date

PART NO. xxx	SHEET. 01 / 11	TITLE. XXX Circuit Diagram	DRAWING NO.
Designer	xxx		®
Reviewed	xxx	PRODUCT. XXX	
Process Reviewed	xxx		
Standardized	xxx	PROPRIETARY INFORMATION This document must not be copied or reproduced in any form without the prior	
Approved	xxx		

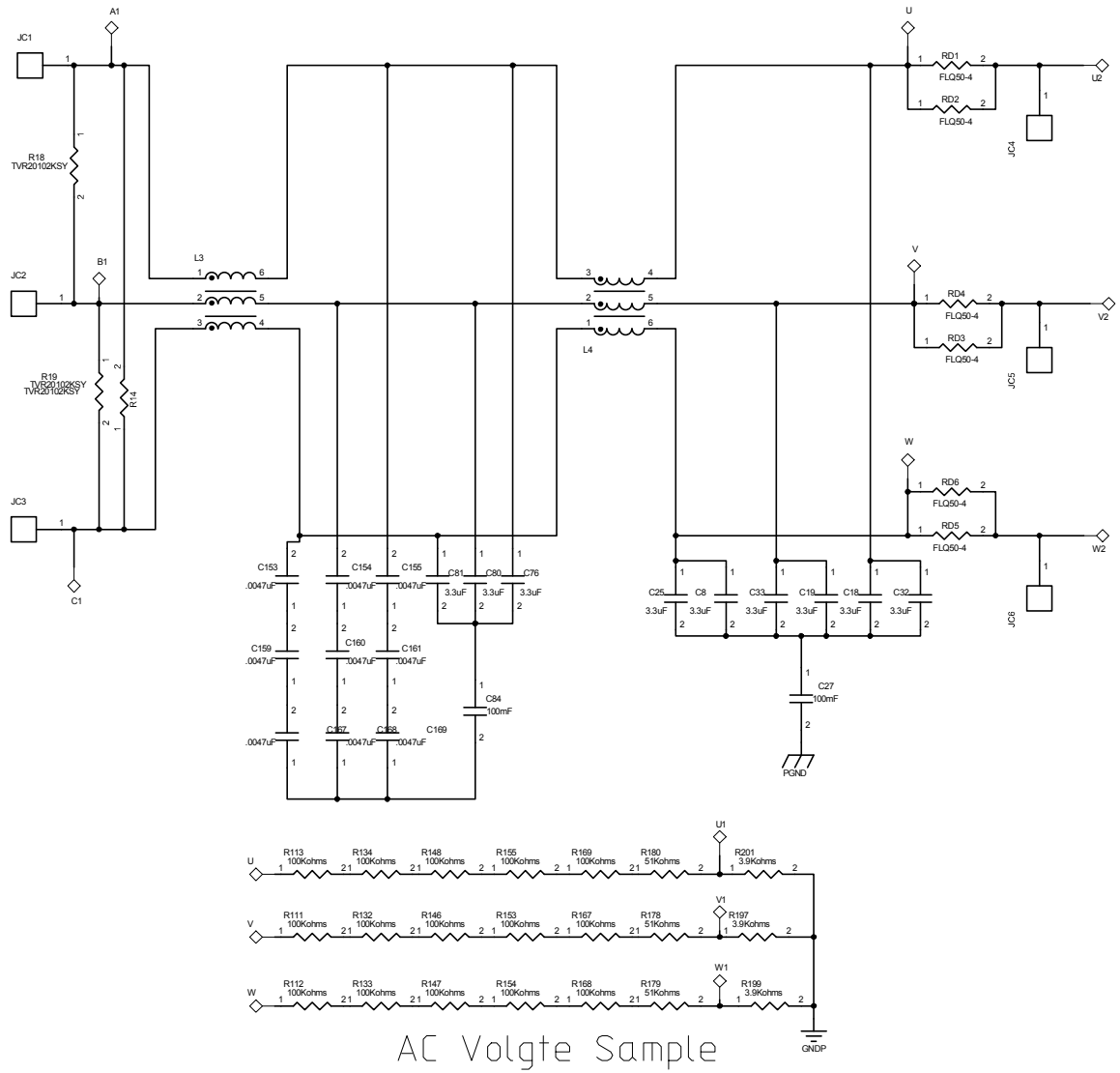

AC Volgte Sample

0	NEW	xxx	2014-7-4
REV	ECO NO.	CHANGE DESCRIPTION	Date

PART NO. xxx	SHEET. 02 / 11	TITLE. XXX Circuit Diagram	DRAWING NO.
Designer	xxx		®
Reviewed	xxx	PRODUCT. XXX	
Process Reviewed	xxx		
Standardized	xxx	PROPRIETARY INFORMATION This document must not be copied or reproduced in any form without the prior	
Approved	xxx		

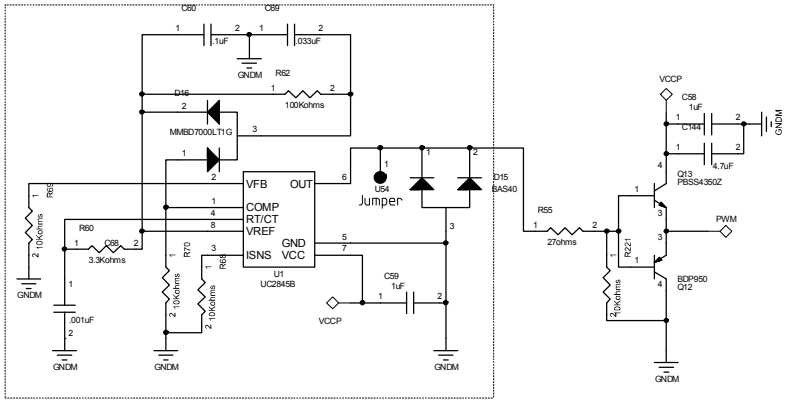

Aux Power 50% PWM Generator Circuit

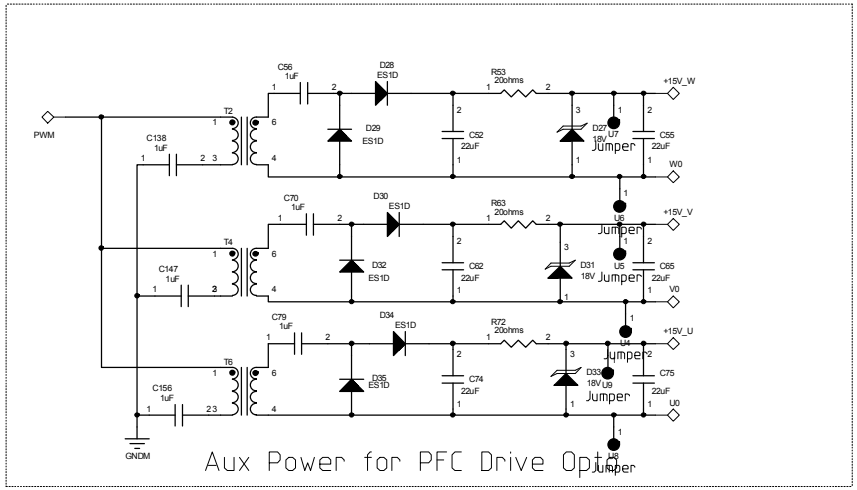

Aux Power for PFC Drive Optic

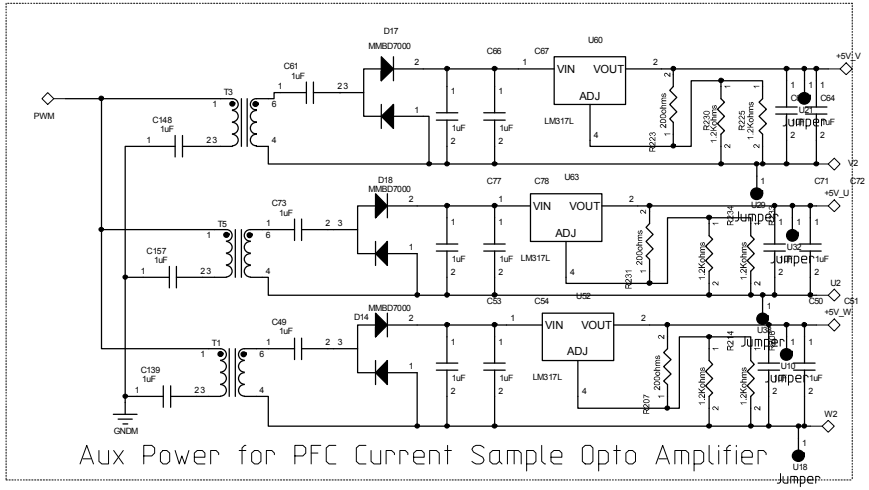

Aux Power for PFC Current Sample Opto Amplifier

0	NEW	xxx	2014-7-4
REV	ECO NO.	CHANGE DESCRIPTION	Date
PART NO. xxx	SHEET. 03 / 11	TITLE. XXX Circuit Diagram	DRAWING NO.
Designer	xxx		®
Reviewed	xxx	PRODUCT. XXX	
Process Reviewed	xxx		
Standardized	xxx	PROPRIETARY INFORMATION This document must not be copied or reproduced in any form without the prior	
Approved	xxx		

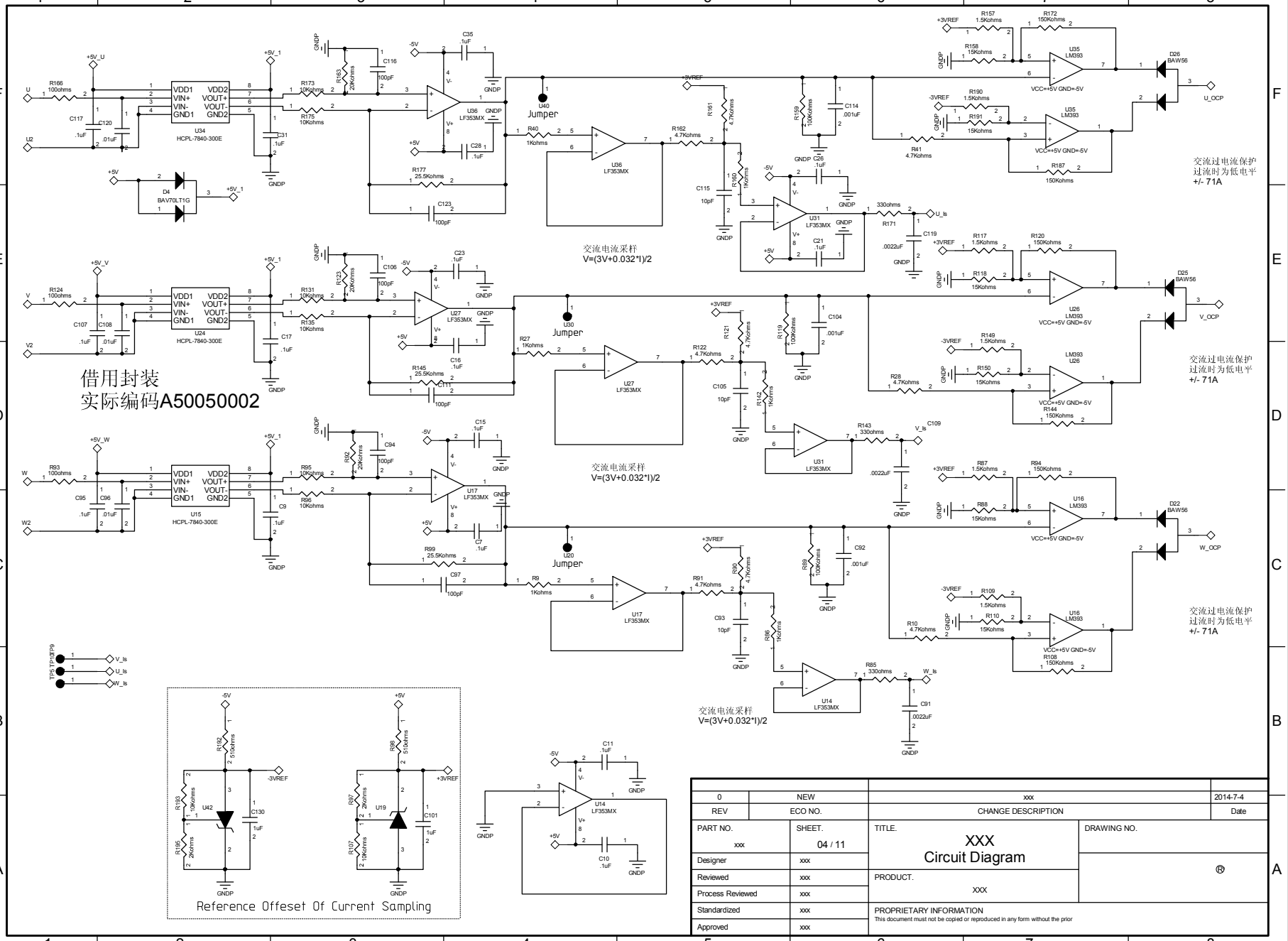

0	NEW	xxx	2014-7-4
REV	ECO NO.	CHANGE DESCRIPTION	Date
PART NO. xxx	SHEET. 04 / 11	TITLE. XXX Circuit Diagram	DRAWING NO.
Designer	xxx		®
Reviewed	xxx	PRODUCT. XXX	
Process Reviewed	xxx		
Standardized	xxx	PROPRIETARY INFORMATION This document must not be copied or reproduced in any form without the prior	
Approved	xxx		

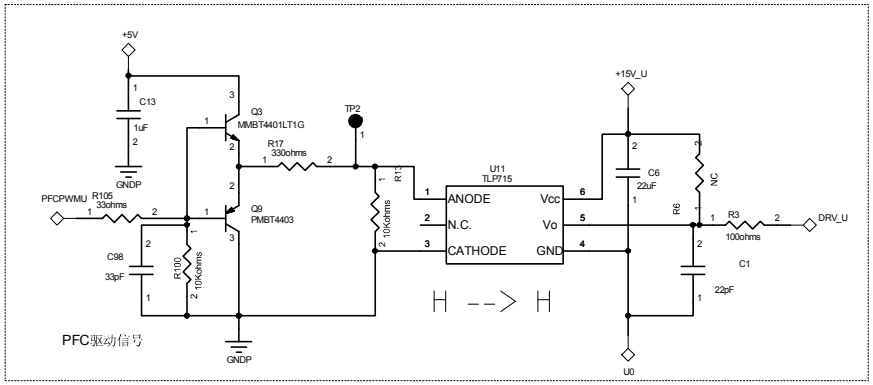

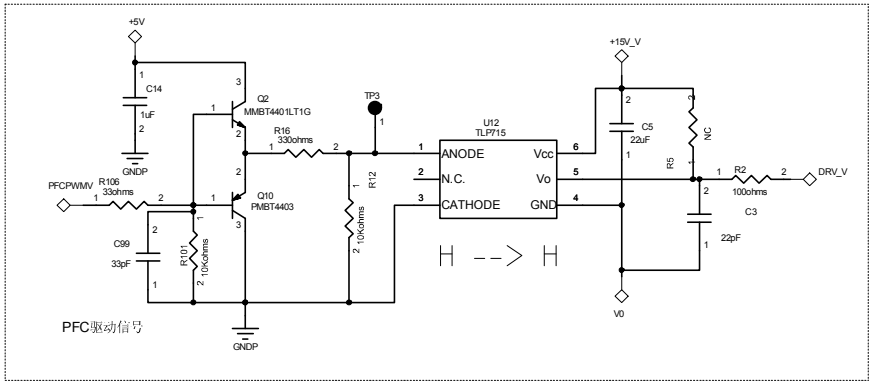

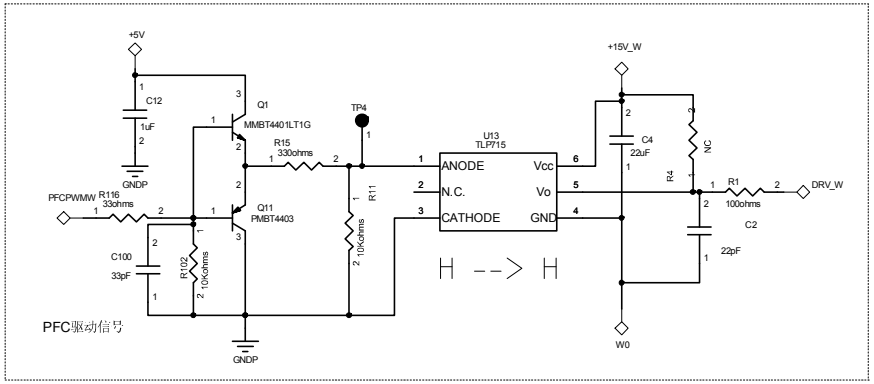

0	NEW	xxx	2014-7-4
REV	ECO NO.	CHANGE DESCRIPTION	Date

PART NO. xxx	SHEET. 05 / 11	TITLE. XXX Circuit Diagram	DRAWING NO.
Designer	xxx		®
Reviewed	xxx	PRODUCT. XXX	
Process Reviewed	xxx		
Standardized	xxx	PROPRIETARY INFORMATION This document must not be copied or reproduced in any form without the prior	
Approved	xxx		

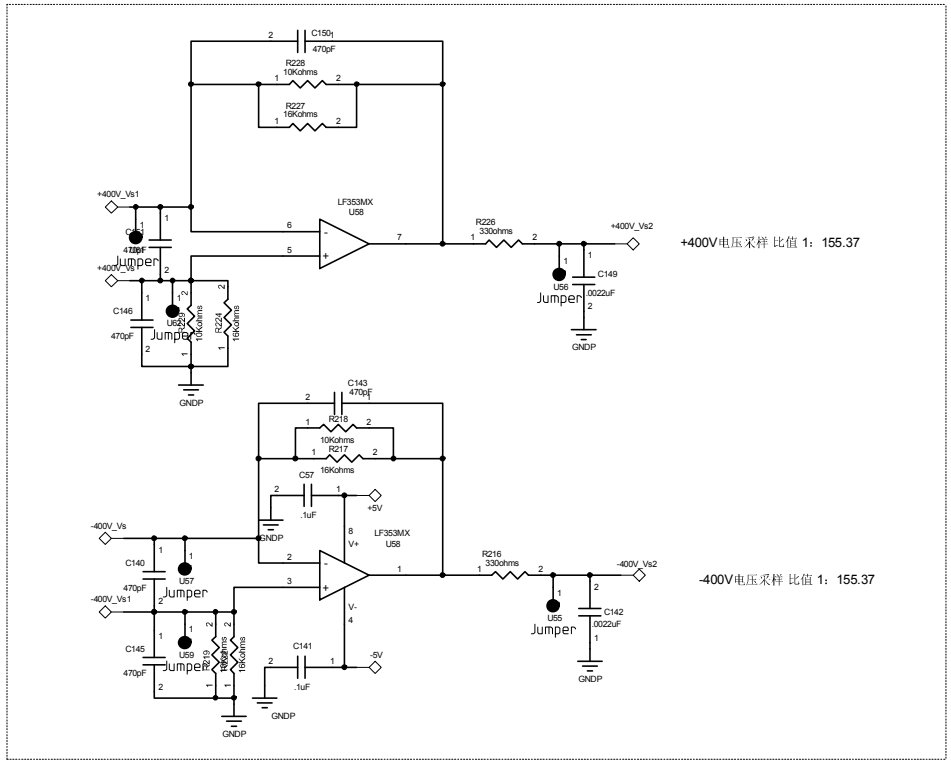

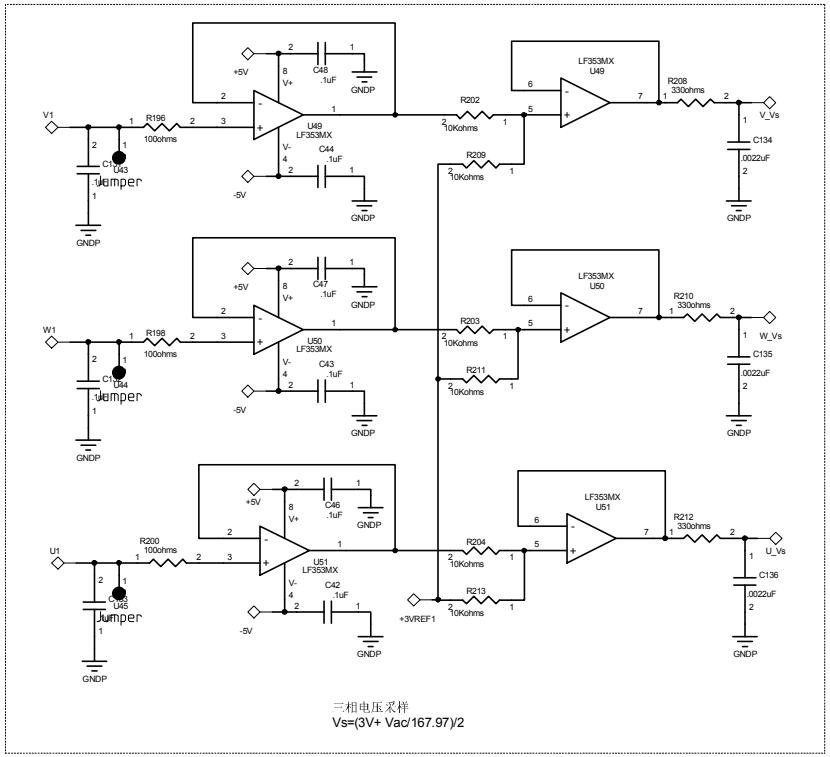

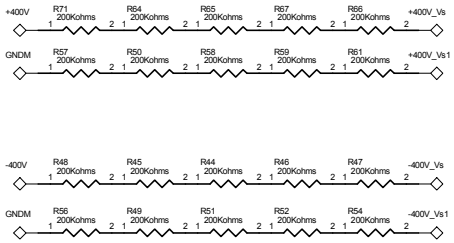

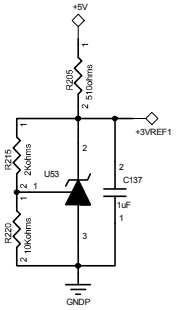

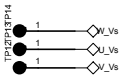

0	NEW	xxx	2014-7-4
REV	ECO NO.	CHANGE DESCRIPTION	Date
PART NO. xxx	SHEET. 06 / 11	TITLE. XXX Circuit Diagram	DRAWING NO.
Designer	xxx		®
Reviewed	xxx	PRODUCT. XXX	
Process Reviewed	xxx		
Standardized	xxx	PROPRIETARY INFORMATION This document must not be copied or reproduced in any form without the prior	
Approved	xxx		

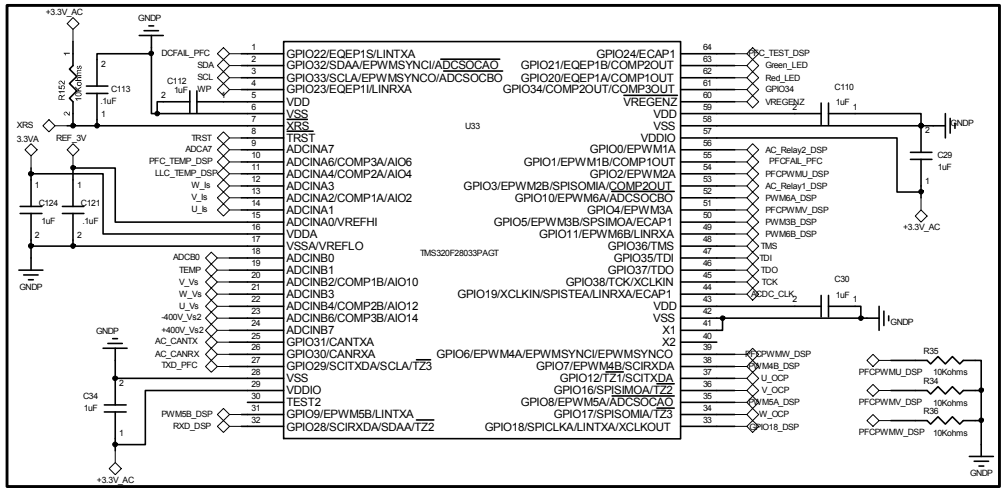

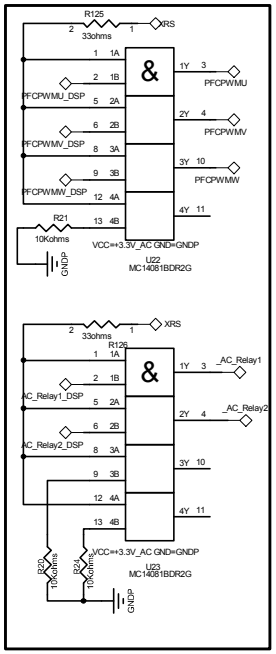

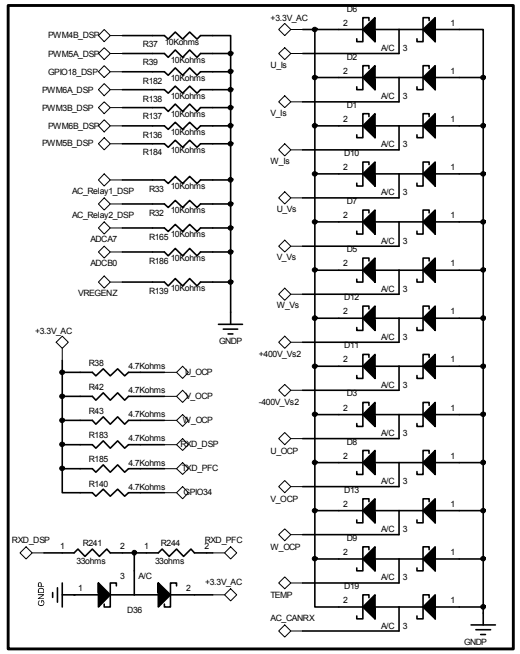

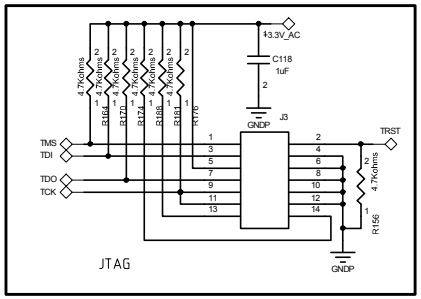

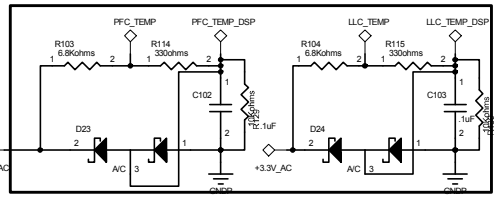

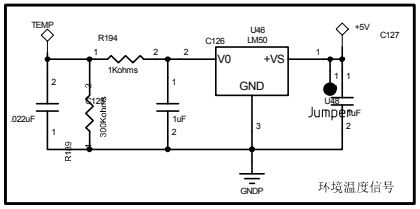

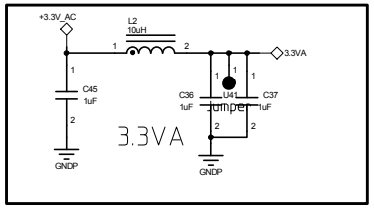

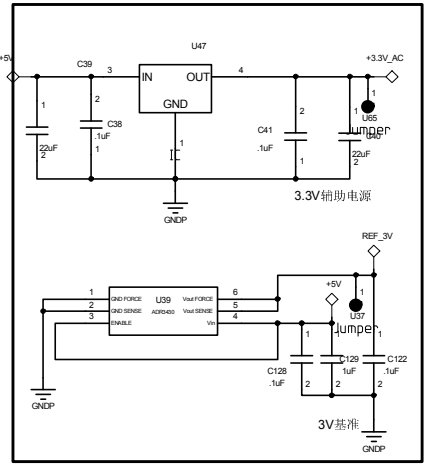

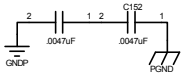

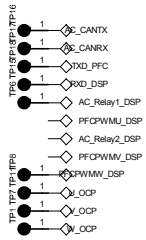

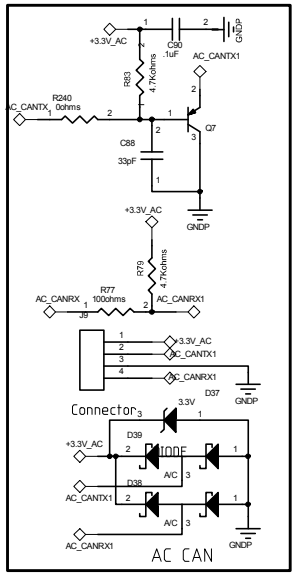

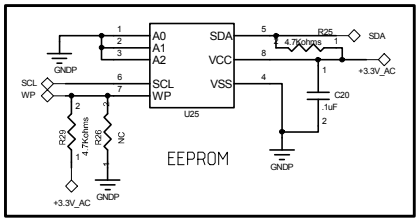

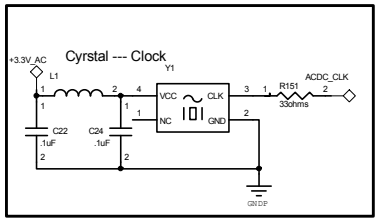

0	NEW	xxx	2014-7-4
REV	ECO NO.	CHANGE DESCRIPTION	Date
PART NO. xxx	SHEET. 07 / 11	TITLE. XXX Circuit Diagram	DRAWING NO.
Designer	xxx		®
Reviewed	xxx	PRODUCT. XXX	
Process Reviewed	xxx		
Standardized	xxx	PROPRIETARY INFORMATION This document must not be copied or reproduced in any form without the prior	
Approved	xxx		

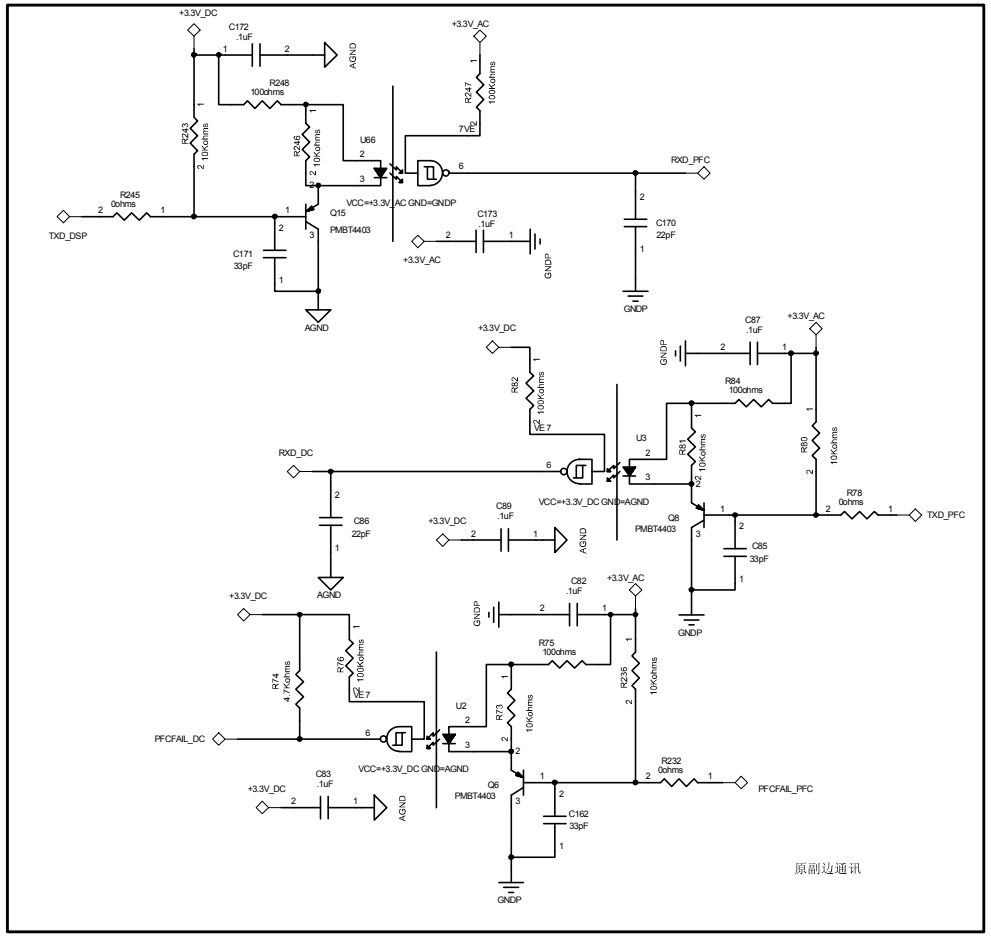

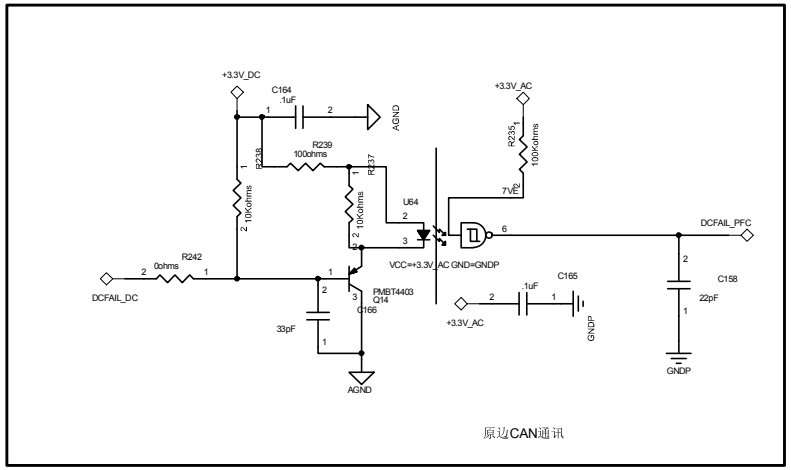

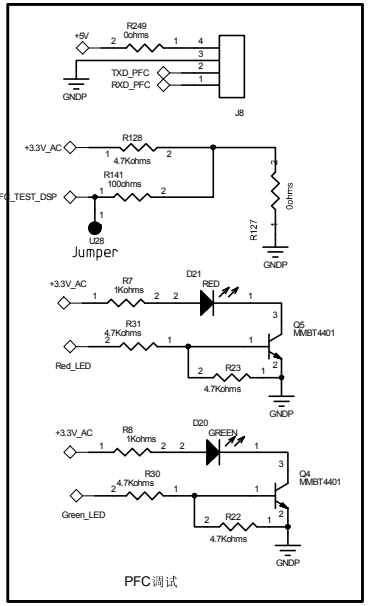

0	NEW	xxx	2014-7-4
REV	ECO NO.	CHANGE DESCRIPTION	Date

PART NO. xxx	SHEET. 08 / 11	TITLE. XXX Circuit Diagram	DRAWING NO.
Designer	xxx		®
Reviewed	xxx	PRODUCT. XXX	
Process Reviewed	xxx		
Standardized	xxx	PROPRIETARY INFORMATION This document must not be copied or reproduced in any form without the prior	
Approved	xxx		

REV	ECO NO.	CHANGE DESCRIPTION	Date
0	NEW	xxx	2014-7-3

PART NO. xxx	SHEET. 09 / 11	TITLE. XXX Circuit Diagram	DRAWING NO.
Designer	xxx		®
Reviewed	xxx	PRODUCT. XXX	
Process Reviewed	xxx		
Standardized	xxx	PROPRIETARY INFORMATION This document must not be copied or reproduced in any form without the prior	
Approved	xxx		

REV	ECO NO.	CHANGE DESCRIPTION	Date
0	NEW	xxx	2014-7-3

PART NO. xxx	SHEET. 10 / 11	TITLE. XXX Circuit Diagram	DRAWING NO.
Designer	xxx		®
Reviewed	xxx	PRODUCT. XXX	
Process Reviewed	xxx		
Standardized	xxx	PROPRIETARY INFORMATION This document must not be copied or reproduced in any form without the prior	
Approved	xxx		

REV	ECO NO.	CHANGE DESCRIPTION	Date
0	NEW	xxx	2014-7-3

PART NO. xxx	SHEET. 11 / 11	TITLE. XXX Circuit Diagram	DRAWING NO.
Designer	xxx		®
Reviewed	xxx	PRODUCT. XXX	
Process Reviewed	xxx		
Standardized	xxx	PROPRIETARY INFORMATION This document must not be copied or reproduced in any form without the prior	
Approved	xxx		