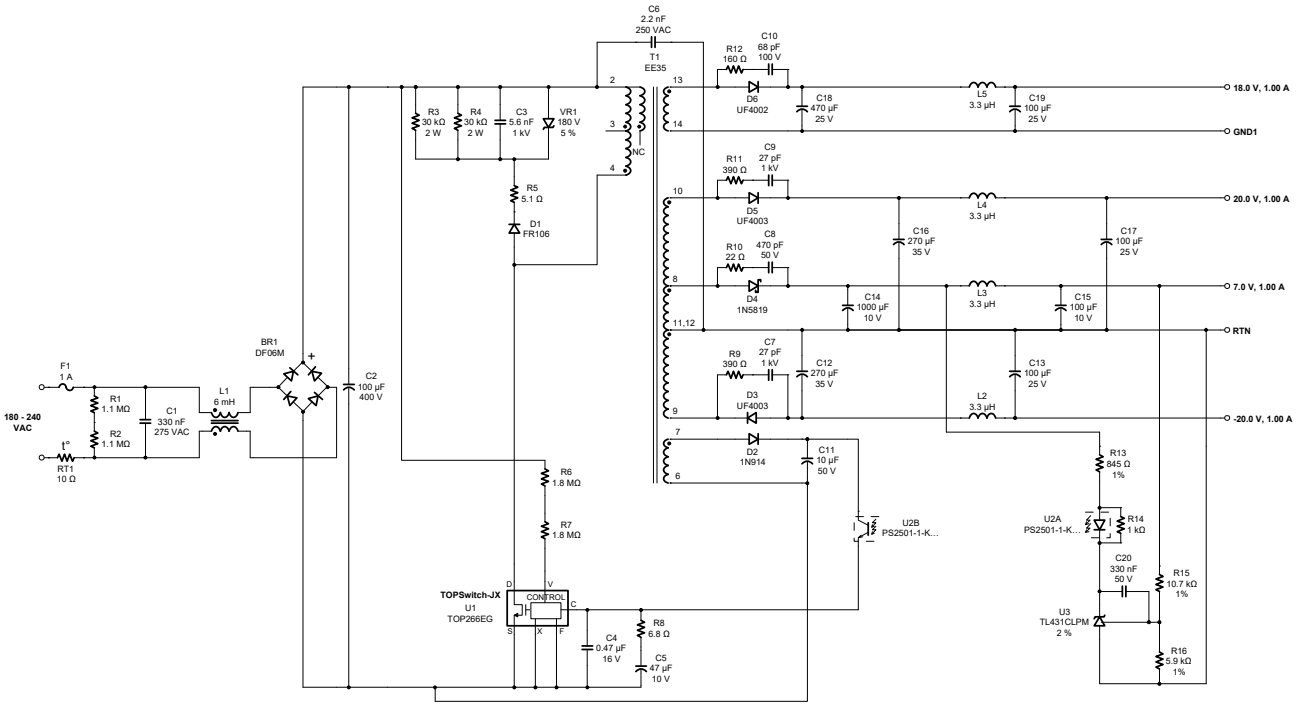
C6
2.2 nF
250 VAC
T1
EE35
R12
160 Ω
C10
68 pF
100 V
D6
UF4002
C18
470 µF
25 V
L5
3.3 µH
C19
100 µF
25 V
18.0 V, 1.00 A
GND1
R3
30 kΩ
2 W
R4
30 kΩ
2 W
C3
5.6 nF
1 kV
VR1
180 V
5 %
NC
R5
5.1 Ω
D1
FR106
R11
390 Ω
C9
27 pF
1 kV
D5
UF4003
L4
3.3 µH
20.0 V, 1.00 A
C16
270 µF
35 V
C17
100 µF
25 V
R10
22 Ω
C8
470 pF
50 V
D4
1N5819
C14
1000 µF
10 V
L3
3.3 µH
C15
100 µF
10 V
7.0 V, 1.00 A
RTN
BR1
DF06M
F1
1 A
R1
1.1 MΩ
R2
1.1 MΩ
C1
330 nF
275 VAC
L1
6 mH
C2
100 µF
400 V
180 - 240
VAC
RT1
10 Ω
R9
390 Ω
C7
27 pF
1 kV
D3
UF4003
C12
270 µF
35 V
C13
100 µF
25 V
L2
3.3 µH
-20.0 V, 1.00 A
D2
1N914
C11
10 µF
50 V
R6
1.8 MΩ
R7
1.8 MΩ
U2B
PS2501-1-K...
R13
845 Ω
1%
U2A
PS2501-1-K...
R14
1 kΩ
C20
330 nF
50 V
R15
10.7 kΩ
1%
U3
TL431CLPM
2 %
R16
5.9 kΩ
1%
TOPSwitch-JX
U1
TOP266EG
CONTROL
D
V
C
S
X
F
C4
0.47 µF
16 V
R8
6.8 Ω
C5
47 µF
10 V