MG20U201
Data Sheet

欢迎免费索样

Version: V0.40

This document contains information on a new product under development by Megawin. Megawin reserves the right to change or discontinue this product without notice.
© Megawin Technology Co., Ltd. 2013 All rights reserved.
shuangyi:The January 21, 2015 revision
2471158555 倪彬

Features

- Operation voltage, 7.0V ~ 200V
- PWM dimming control
- Open loop current peak detector
- Provide constant frequency or constant off-time control

Contents

Features 2
1 Description 4
2 Order Information 4
3 Application Field 4
4 Pin Description 5
4.1 Pin Definition 5
4.2 Pin Configuration 5
5 Block Diagram 5
6 Application Circuit 6
7 Application Information 6
8 Absolute Maximum Rating 8
9 Electrical Characteristics 8
10 Package Dimension 10
10.1 SOP8 Package Dimension 10
11 Revision History 10

1 Description

The MG20U201 is a current feedback control, buck type LED driver IC. It achieves good output current regulation without the need of external compensation components.

The MG20U201 integrates a HV start-up circuit, 7.0V ~ 200V linear regulator, precision comparator, PWM control and ring oscillator into one chip. With those building circuits, a precision current output buck mode converter with dimming control (PWM type) can be easily achieved with only few external components. The PWM dimming range is 0~100% duty at a frequency of up to 10KHz.

The chip is available in 8-pin SOP package.

2 Order Information

	MG20U201ASC1
Package	SOP8

3 Application Field

DC-DC LED driver application

Backlighting LED driver

General-purpose constant current source

4 Pin Description

4.1 Pin Definition

SOP8	Pin Name	Description
1	VIN	7.0V ~ 200V high voltage input.
2	CS	Current sense input pin.
3	GND	Ground pin.
4	GATE	Driver for external power MOS.
5	PWM	PWM dimming input.
6	VDD	Regulated core supply.
7	NC	No connection.
8	RT	Ring oscillator bias input. When RT is connected to ground via a resistor, the MG20U201 operates in constant frequency mode. When the resistor is connected between RT & GATE, the MG20U201 operates in constant off-time mode.

4.2 Pin Configuration

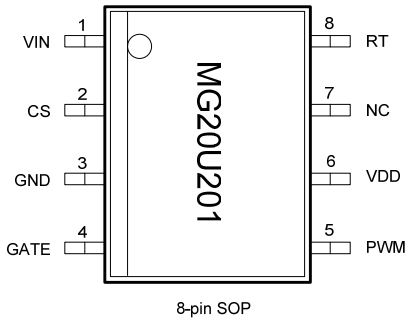

5 Block Diagram

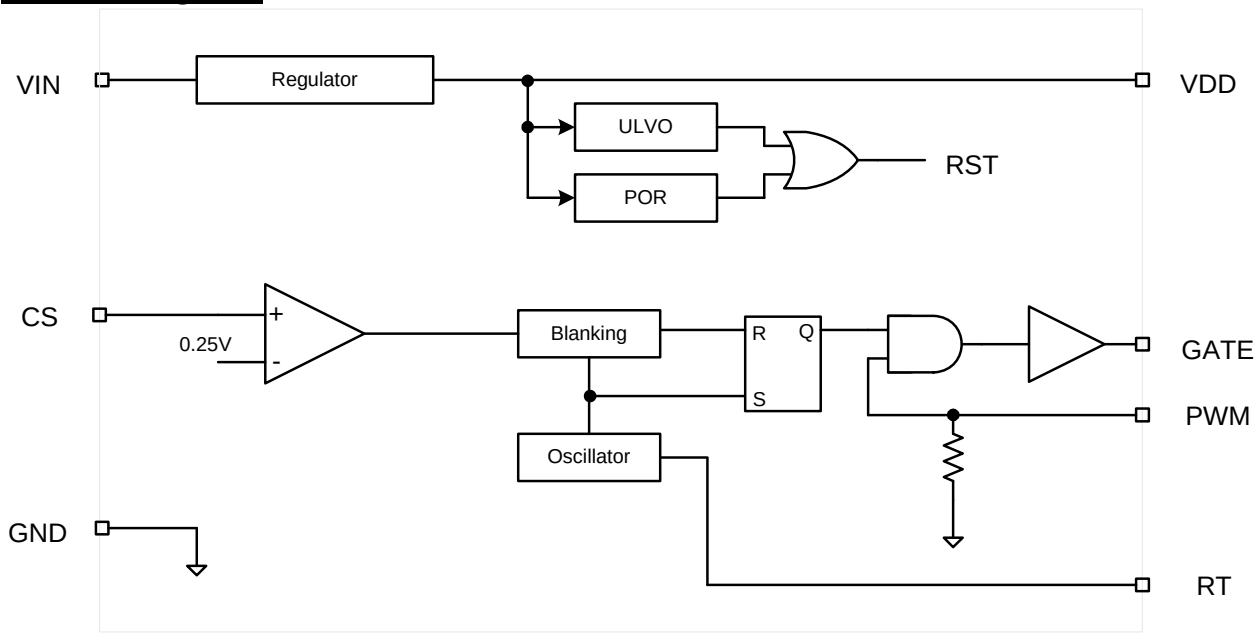

6 Application Circuit

Buck Driver Example

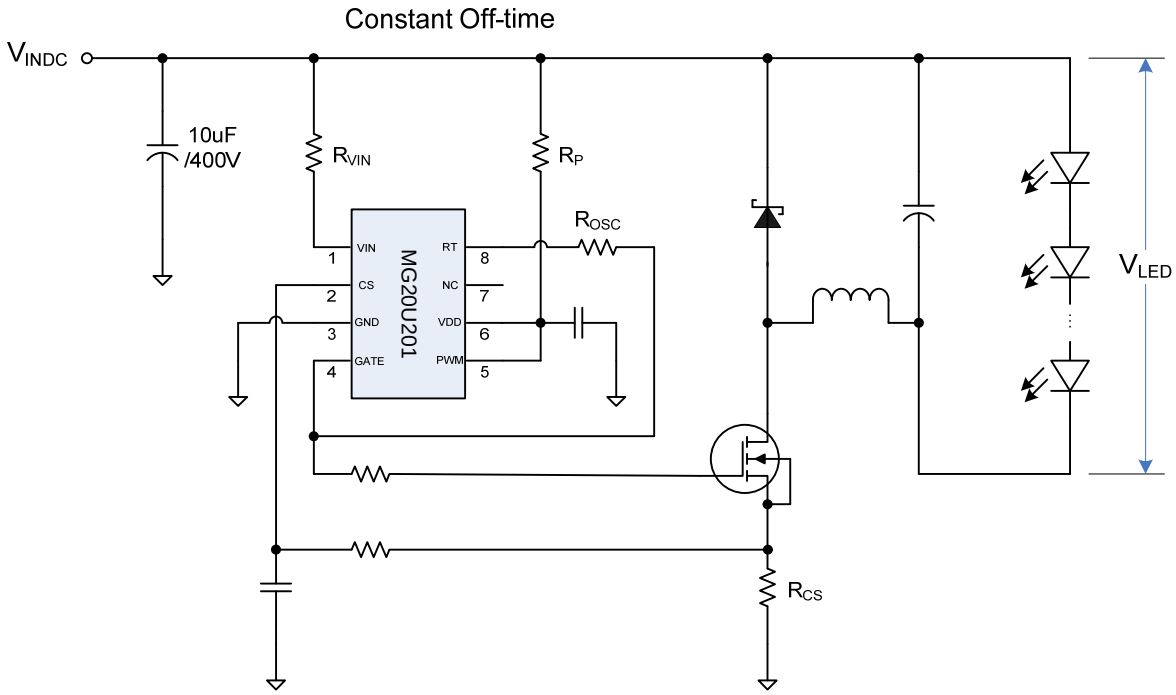

7 Application Information

Input Voltage Regulator

The MG20U201 integrates one high voltage regulator to generate the power for internal core logic. The internal power is taken from the high voltage input directly. When a voltage (7~200V) is applied at the VIN pin, the regulator maintains a constant 5.6V at the VDD pin. The VDD pin must be bypassed by a low ESR capacitor to provide a low impedance path for the high frequency current of the output date driver.

Since the current driving capability of the regulator is limited to around 0.7mA. It's not suitable for driving the external components. User must make sure the switching frequency should not be too high and the load at the GATE pin should not be too heavy.

It's recommended to add a pull-high resistor (R_P) between V_{INDC} and VDD pin to provide more driving current for large I_{LED} application.

Selection of the Switching Control Scheme

The MG20U201 provides two control schemes, constant frequency and constant off time. For a buck converter, the duty of PWM control signal is determined as D = VO / VIN, where VO is the voltage drop on LED strings (V_{LED}). For a heavy load application (large V_{LED} drop, D>0.45), user should select the constant off time mode.

Selection of the Switching Frequency (F_S)

Rule of thumb, the range of 20KHz ~ 100KHz is recommended.

For detail frequency setting, please check design assistant file "MG20U201 DesignAssistantFileV1_0.xls".

GATE Output

The GATE output of the MG20U201 is used to drive an external MOSFET. It is recommended that the gate charge Q_G of the external MOSFET should satisfy the equation as below:

$(V_{INDC} - 5.6V)/R_P + 0.7mA >= Fs*Q_G$

In the above equation, Q_G is the GATE charge of the external FET obtained from the manufacturer's datasheet.

Selection of the Sense Resistor (R_{CS})

The MG20U201 is an open loop buck converter with peak current control. The peak current is decided by the equation $I_{PEAK+} = V_{CSTH} / R_{CS}$, where V_{CSTH} is around 0.27V. The average current (I_{LED}) is described as follow:

The $\triangle I_{LED}$ is determined by T_{OFF}, L value and V_{LED} load.

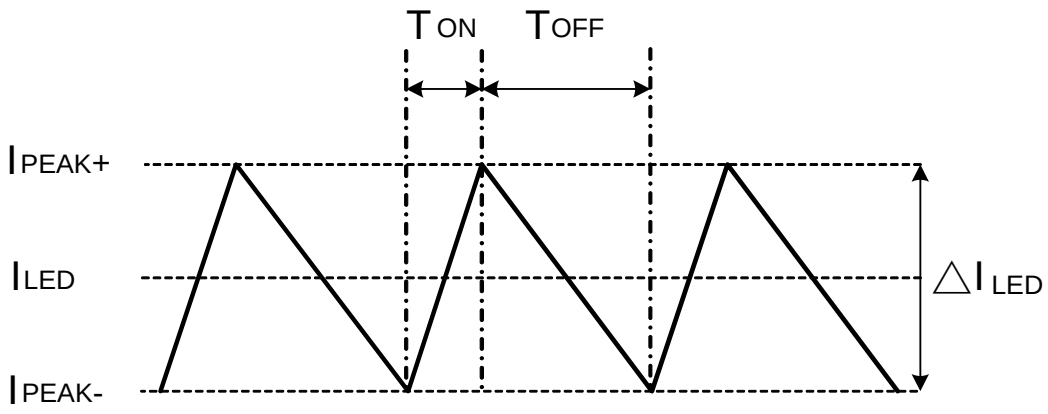

8 Absolute Maximum Rating

Parameter	Rating	Unit
VIN to GND	-0.5 to +225	V
VDD to GND	7	V
CS, PWM, GATE, RT to GND	-0.3 to (V_{DD} + 0.3)	V
Junction Temperature	-40 to +125	°C
Storage temperature	-55 to +155	°C

Note: Exposure to conditions beyond those listed under Absolute Maximum Ratings may adversely affect the life and reliability of the device.

9 Electrical Characteristics

All typical numbers are at Ta=25℃ and V_{IN}=12V, unless otherwise noted.

Parameter	Sym.	Conditions	Min.	Typ.	Max.	Unit
Input DC supply voltage range	V_{INDC}	DC input voltage	7.0	-	200	V
Shut down mode supply current	I_{INSD}	PWM=0	-	0.5	-	mA
Operating Current	I_{OP}	V_{IN} > 7.5V, R_{OSC}=226K and C_{GATE}=500P	-	0.8	1.2	mA
Internal Regulator						
Internally regulated Voltage	V_{DD}	V_{IN} =7.5V ~ 200V, R_{OSC}=226K, C_{GATE} = 500pF, No load in pin VDD	5.0	5.6	6.0	V
Maximal pin VDD voltage	V_{DDMAX}	When an external voltage applied to pin VDD	-	-	7.0	V
Output current of the regulator	I_{SOURCE}	V_{DD} = 5.6V	-	0.7	-	mA
VDD under-voltage lockout threshold	V_{UVLO}	V_{IN} rising	-	5.30	-	V
VDD under-voltage lockout hysteresis	ΔUVLO	V_{IN} falling	100	300	500	mV
PWM Dimming						
Pin PWM input high voltage	$V_{PWM\ (H)}$	V_{IN} =7.5V ~ 200V	2.0	-	-	V
Pin PWM input low voltage	$V_{PWM\ (L)}$	V_{IN} =7.5V ~ 200V	-	-	0.8	V
Pin PWM pull-down resistance	R_{PWM}	V_{DD} =5.5V	50	100	150	KΩ
PWM signal duty	D_{PWM}		0	-	100	%
Current Sense Input						
Current sense pull-in threshold voltage	V_{CSTH}	Ta= 0°C to +125°C, V_{DD} = 5.6V	255	275	285	mV
		Ta= -40°C, V_{DD} = 5.6V	200	-	-	mV
Offset voltage of comparator	V_{OS}		-20	-	20	mV

Electrical Characteristics (continued)

Current sense blanking interval	t_{BLANK}	V_{CS}=0.55 V_{DD}	150	215	285	nS
Delay from CS trip to GATE IO	t_{DELAY}	V_{CS}= V_{CSTH} +50mV after t_{BLANK}	-	-	300	nS
Gate Driver						
GATE output high voltage	$V_{GATE\ (H)}$		V_{DD} -0.4	-	-	V
GATE output low voltage	$V_{GATE\ (L)}$		-	-	0.4	V
GATE output high driving current	$I_{GATE\ (H)}$	V_{GATE}= V_{DD}-0.4V	-	10	-	mA
GATE output low sinking current	$I_{GATE\ (L)}$	V_{GATE}= 0.4V	-	25	-	mA
GATE output rise time	t_{RISE}	C_{GATE} = 500pF	-	30	50	nS
GATE output fall time	t_{FALL}	C_{GATE} = 500pF	-	30	50	nS
Oscillator						
Oscillator frequency	F_{OSC}	R_{OSC}= 1.0MΩ	22K	27K	32K	Hz
		R_{OSC}= 226KΩ	90K	110K	120K	

10 Package Dimension

10.1 SOP8 Package Dimension

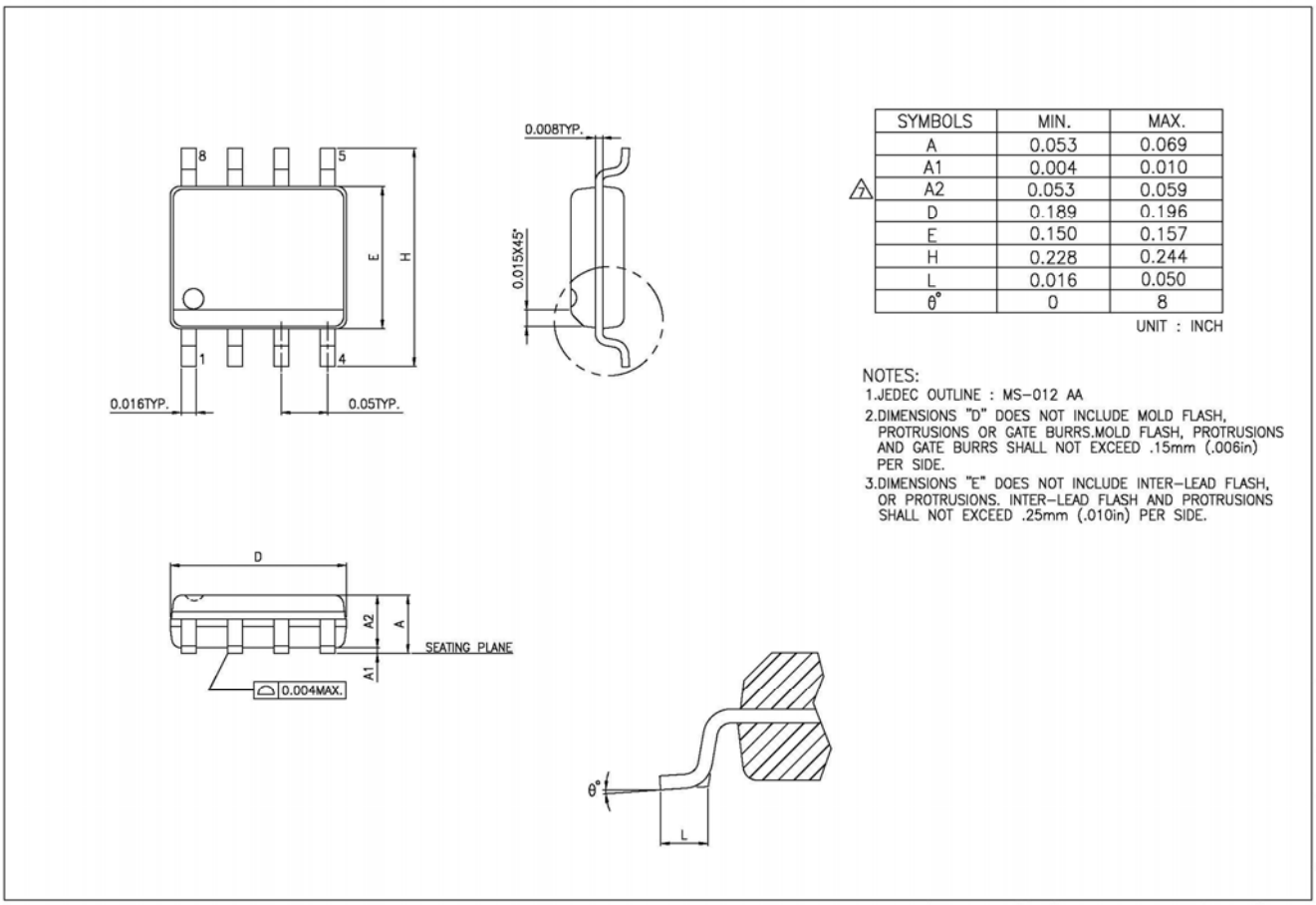

11 Revision History

Rev	Descriptions	Date
V0.10	Initial release.	2012/03/07
V0.20	Modify the minimum operation voltage.	2012/10/01
V0.30	Modify the supply voltage range.	2013/03/05
V0.40	Modify the application circuit and add gate output notification.	2013/06/17